| REVISION HISTORY | | | | | |
|---|---|---|---|---|---|
| REV | ECO# | DESCRIPTION | DRAWN | APPROVED | DATE |
| B | E010545 | UPDATED BRANDING | W.TEFFT | J.MITCHELL | 20SEP2016 |
| C | B011148 | ADDED CAT II AFTER Z662. ADDED "ASME A350..." TO ITEMS 1 AND 3 | W.TEFFT | J.MITCHELL | 04JUN2019 |

ASME B31.4/B31.8/CSA Z662 CAT II WITH 0.50 OR 0.60 DESIGN FACTOR (C)
DESIGN TEMPERATURE -46°C (-50°F) TO 121°C (250°F)

| CLOSURE KIT NUMBER | WALL | MATING BORE | BORE TYPE | MAWP BAR | MAWP PSI |
|---|---|---|---|---|---|
| 12342265 | 12.70(.500in) | 247.65(9.750in) | THROUGH | 102 | 1480 |
| 12342266 | 11.13(.438in) | 250.80(9.874in) | TAPERED | 102 | 1480 |
| 12342267 | 9.27(.365in) | 254.51(10.020in) | TAPERED | 102 | 1480 |
| 12342268 | 7.95(.313in) | 257.15(10.124in) | TAPERED | 102 | 1480 |
| 12342269 | 6.35(.250in) | 260.35(10.250in) | TAPERED | 102 | 1480 |
| 12342270 | 4.78(.188in) | 263.50(10.374in) | TAPERED | 102 | 1480 |

SHELL: ASME B31.4/B31.8/CSA Z662 CAT II WITH 0.50 OR 0.60 DESIGN FACTOR (C)
HEAD: ASME BPVC SECTION VIII DIVISION 1 (U-STAMP)
DESIGN TEMPERATURE -46°C (-50°F) TO 121°C (250°F)

| CLOSURE KIT NUMBER | WALL | MATING BORE | BORE TYPE | MAWP BAR | MAWP PSI |
|---|---|---|---|---|---|
| 12342271 | 12.70(.500in) | 247.65(9.750in) | THROUGH | 102 | 1480 |
| 12342272 | 11.13(.438in) | 250.80(9.874in) | TAPERED | 102 | 1480 |
| 12342273 | 9.27(.365in) | 254.51(10.020in) | TAPERED | 102 | 1480 |
| 12342274 | 7.95(.313in) | 257.15(10.124in) | TAPERED | 102 | 1480 |
| 12342275 | 6.35(.250in) | 260.35(10.250in) | TAPERED | 102 | 1480 |
| 12342276 | 4.78(.188in) | 263.50(10.374in) | TAPERED | 102 | 1480 |

CLOSURE MAY BE EVALUATED FOR OTHER CONDITIONS UPON REQUEST.

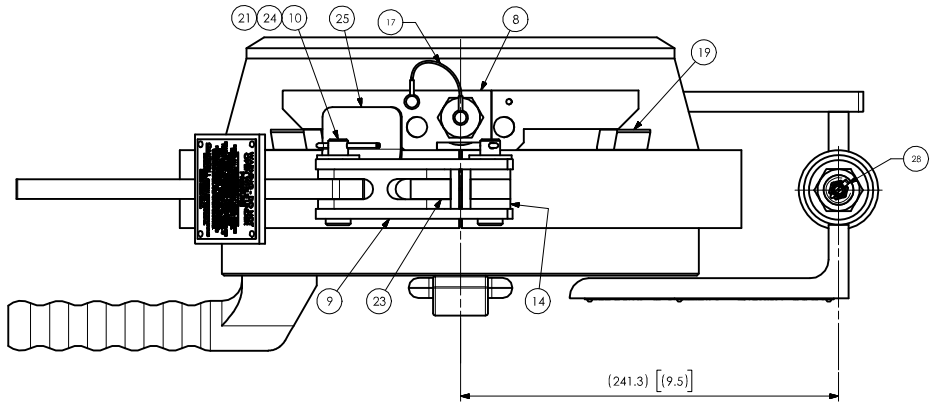


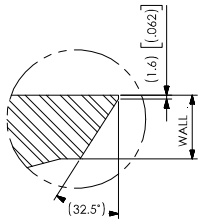


WELD END PREPARATION
THROUGH BORE

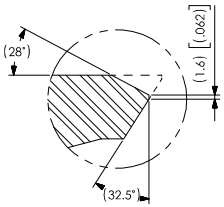


WELD END PREPARATION
TAPERED BORE

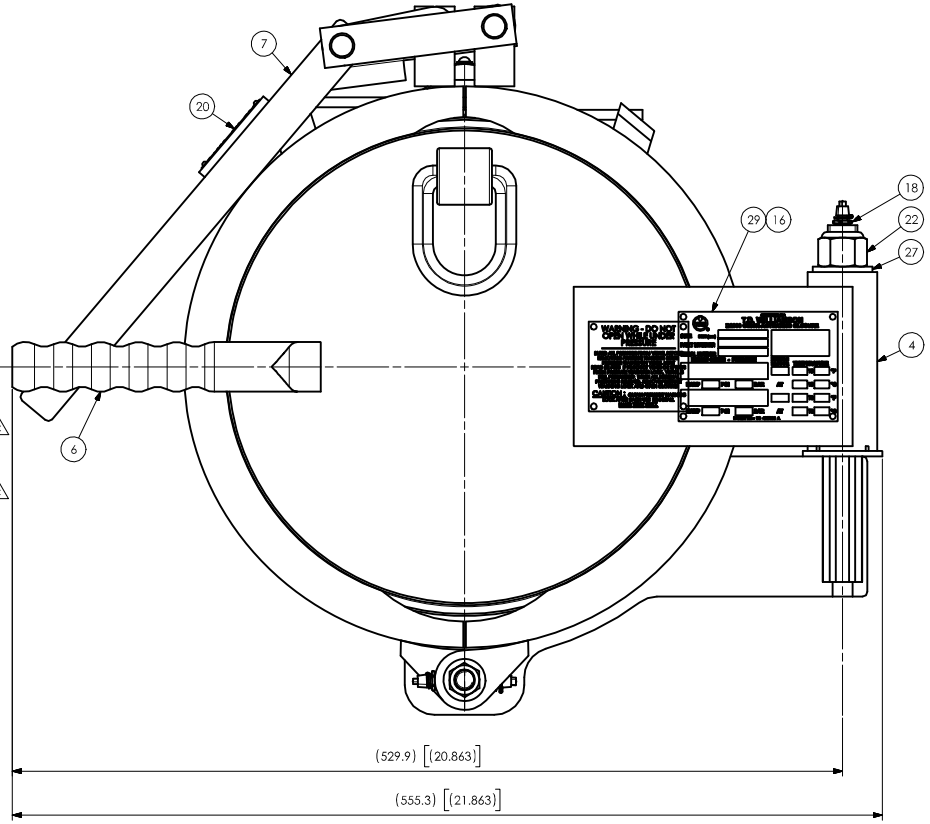


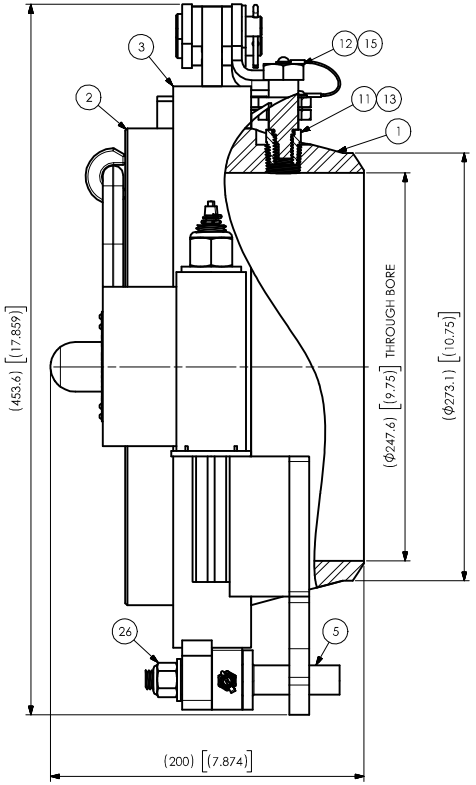


THE PRIMARY O-RING IS SOLD SEPARATELY.
THE O-RING HAS A .25in CROSS SECTION WITH A 10.42in INSIDE DIAMETER - CUT LENGTH 33.61in.
SEE DRAWING 19-3700-DDDD-WC

| ITEM | QTY. | DESCRIPTION | MATERIAL |
|---|---|---|---|
| 1 | 1 | BARREL COLLAR ASSEMBLY, 10in RH .500in WT | ASME SA350 LF2 Cl.1/ ASTM A694 F60 NORM DUAL CERTIFIED (C) |
| 2 | 1 | DOOR ASSEMBLY, 10in | ASME SA350 LF2 Cl.1/ ASTM A694 F46 NORM DUAL CERTIFIED |
| 3 | 2 | CLAMP RING HALF ASSEMBLY, 10in | ASME SA350 LF2 Cl.1/ ASTM A694 F60 NORM DUAL CERTIFIED (C) |
| 4 | 1 | DOOR HINGE ARM ASSEMBLY, 10in RH | TDW STANDARD MATERIALS |
| 5 | 1 | PIVOT PIN, 8in-14in | TDW STANDARD MATERIALS |
| 6 | 1 | DOOR HANDLE, CLOSURE 6in-14in | TDW STANDARD MATERIALS |
| 7 | 1 | CLAMP HANDLE, 10in | TDW STANDARD MATERIALS |
| 8 | 2 | UPPER LOCKING LUG, 8in-14in | TDW STANDARD MATERIALS |
| 9 | 1 | HANDLE LINK, 4in-14in | TDW STANDARD MATERIALS |
| 10 | 2 | CLEVIS PIN, .500in X 2.000in | TDW STANDARD MATERIALS |
| 11 | 1 | PRESSURE WARNING LOCK BUSHING, 4in-14in | TDW STANDARD MATERIALS |
| 12 | 1 | PRESSURE WARNING LOCK SCREW, 4in-14in | TDW STANDARD MATERIALS |
| 13 | 1 | O-RING, .562in X .438in ID FKM LT | TDW STANDARD MATERIALS |
| 14 | 2 | SPACER, 1.000in X .250in | TDW STANDARD MATERIALS |
| 15 | 2 | DRIVE SCREW, #8 X .375in ROUND HEAD TYPE U | TDW STANDARD MATERIALS |
| 16 | 12 | DRIVE SCREW, #2 X .188in ROUND HEAD TYPE U | TDW STANDARD MATERIALS |
| 17 | 1 | WIRE ROPE LANYARD, .045in X 8in LONG | TDW STANDARD MATERIALS |
| 18 | 3 | GREASE FITTING, .125in-27 PTF STRAIGHT | TDW STANDARD MATERIALS |
| 19 | 2 | CLAMP RING STOP, 4in-14in | TDW STANDARD MATERIALS |
| 20 | 2 | PLATE, PRESSURE WARNING | TDW STANDARD MATERIALS |
| 21 | 3 | FLAT WASHER, .500in STEEL PLATED | TDW STANDARD MATERIALS |
| 22 | 1 | SELF LOCKING NUT, .750in-10UNC | TDW STANDARD MATERIALS |
| 23 | 1 | COILED SPRING PIN, .500in X 1.000in LG | TDW STANDARD MATERIALS |
| 24 | 2 | COTTER PIN .125in X 1.250in ZINC PLATED | TDW STANDARD MATERIALS |
| 25 | 1 | BLOCKING LINK, HANDLE | TDW STANDARD MATERIALS |
| 26 | 1 | SELF LOCKING NUT, .500in-13UNC | TDW STANDARD MATERIALS |
| 27 | 1 | FLAT WASHER, .750in SAE PLAIN | TDW STANDARD MATERIALS |
| 28 | 3 | GREASE FITTING DUST CAP | TDW STANDARD MATERIALS |
| 29 | 1 | NAMEPLATE, D2000 CLOSURE | TDW STANDARD MATERIALS |

ALL DIMENSIONS ARE IN (MILLIMETERS) AND [(INCHES)] FOR REFERENCE ONLY

T.D. Williamson Pipeline Performance

ALL DATA CONTAINED IN THE DOCUMENT IS PROPRIETARY AND SHALL NOT BE DUPLICATED OR DISTRIBUTED WITHOUT THE EXPRESS WRITTEN CONSENT OF T.D. WILLIAMSON

| | | |
|---|---|---|
| DRAWN | J.DELGADO | 8FEB18 |
| CHECKED | N.JAMSHIDI | 13FEB18 |
| APPROVED | J.MITCHELL | 14FEB18 |

DO NOT SCALE DRAWING
APPROX. WEIGHT (KG): 64
SHEET SIZE: A1

CUSTOMER DRAWING, D2000
CLOSURE 10in RH

DWG NO: CD00000732 | REVISION: C
SCALE: NONE | UNITS: MM | SHEET 1 OF 1